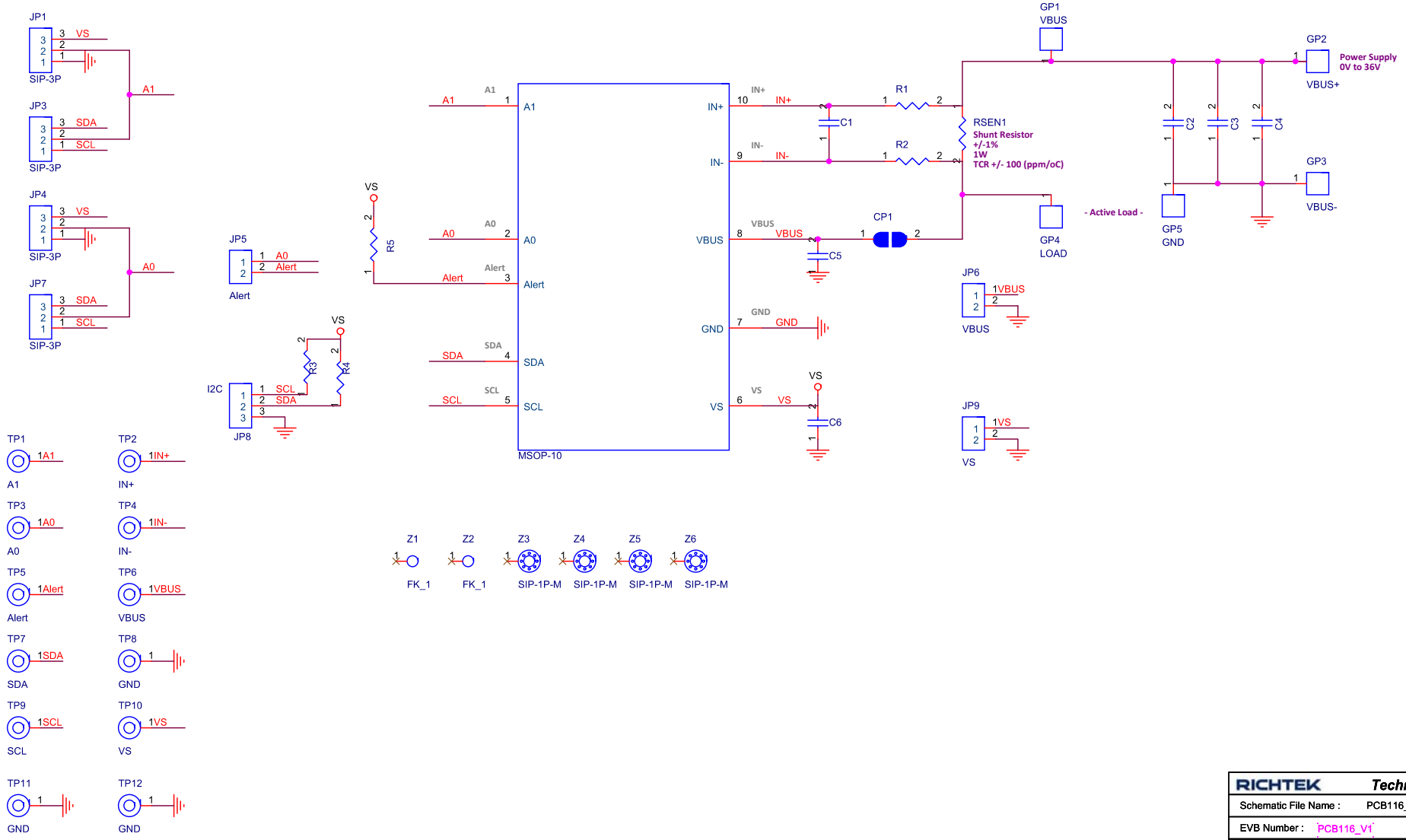


| RICHTEK Technology Corp. | |
|---|---|
| Schematic File Name : PCB116_V1 | |
| EVB Number : PCB116_V1 | Size : B |
| Engineer Name : | Sheet 1 of 1 |
| Date: Friday, July 29, 2022 | |